Registered Office:
Avenue de Cortenbergh 71
1000 Brussels
Belgium
tel: +32 2 736 24 06
fax: +32 2 736 58 82
e-mail: info@teppfa.eu
www.teppfa.eu

A Good Practice Guide for Flange Jointing of Polyethylene Pressure Pipes

Introduction

Flanged joints are normally used to connect PE pressure pipelines to valves, pumping stations and pipelines of other pipe materials. A flanged joint to be used for PE pipes consists of different components, might be manufactured by different companies. The joint must be able to transfer long-term axial forces with maintained tightness, which requires use of suitable components and a correct assembly.

1. Flanged joint components

figure 1: Typical flanged joint

The components in a flanged joint for PE pipes are:

- Stub-ends or flanged adapters of PE
- Back-up flanges
- Gaskets
- Bolts
- Washers

Stub-ends and flanged adapters

Stub-ends and flange adapters are made of PE. Stub-ends have shorter lengths than flanged adapters, but the flange dimensions are the same for both. Most of the dimensions for stub-ends and flanged adapters are standardized in ISO 9624.

Back-up flanges

Dimensions for back-up flanges, excluding thicknesses, are standardized in ISO 9624. Back-up flanges are manufactured of different materials and are available in different designs. Several corrosion protection systems also apply. It is important that back-up flanges (backing rings) are sufficiently rigid to prevent unacceptable dishing when the bolts are tightened. Such distortion would increase the friction under the bolt heads and nuts so that only a very small part of the tightening torque would be transferred into useful clamping load. Good quality washers will help in this respect.

Gaskets

Gaskets are often made of rubber materials, but some other materials are also approved for use. The gasket material shall be chemically and thermally compatible with the fluid in the pipe, and have an appropriate hardness. Gaskets of soft materials need to be oversized with holes for the bolts and centered by the bolts (so called full face style, fig. 2) to facilitate assembly. Soft or too thick gaskets could show a tendency to blow out at high pressures. Gaskets made of harder materials and rubber gaskets with a steel core (fig. 4) are usually designed as drop-in gaskets centered by the bolts.

figure 2: Full face rubber gasket centred on the bolts

figure 3: Plane drop-in gasket

figure 4: Drop-in steel core rubber gasket

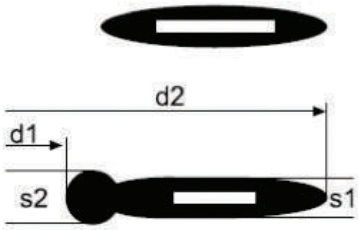

figure 5: Steel core rubber gasket profiles

Drop-in steel core rubber gaskets have shown significantly better performance than other types of gaskets when used for large diameter flanged joints. The best sealing function is achieved for steel core rubber gaskets with an integrated o-ring on the inner edge of the gasket (fig. 5).

Bolts

Number of bolts and bolt sizes are standardized in ISO 9624. Bolts of steel are available in several material qualities. Corrosion aspects ought to be considered at the selection of bolt material. The thread of the bolts should be clean and lightly oiled. It is important that thick, hardened, and lightly oiled washers are employed in order to reduce friction under the bolt head or nut, and also to help spread the load from the bolts to the backing ring.

2. Flanged joint standard

Standardized dimensions for stub-ends and back-up flanges are given in ISO 9624, which is the standard to which EN 12201-3 refers. Table 1 shows the measurements which are given in ISO 9624 for flanged joints of pressure class PN 10. Flanged joints for pressure class PN 16 require increased bolt sizes and other dimensions for the back-up flanges.

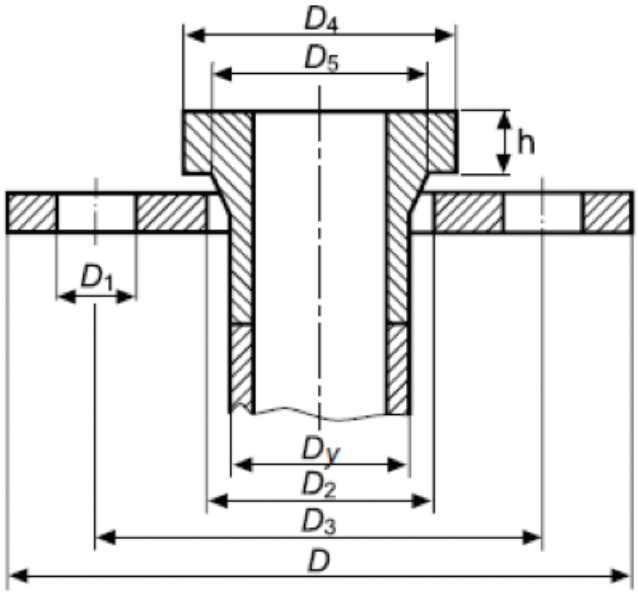

figure 6

Key for dimensions of components in flanged joints (as shown in table 1 below)

Table 1: Dimensions for PE flanged joints class PN10

Pipe diameter D_y (mm)	Stub-end dimensions (mm)		Back-up flange dimensions (mm)				Bolts	
	D_4	D_5	D	D_2	D_3	D_1	Number	Size
20	45	27	95	28	65	14	4	M12
25	58	33	105	34	75	14	4	M12
32	68	40	115	42	85	14	4	M12
40	78	50	140	51	100	18	4	M16
50	88	61	150	62	110	18	4	M16
63	102	75	165	78	125	18	4	M16
75	122	89	185	92	145	18	4	M16
90	138	105	200	108	160	18	8	M16
110	158	125	220	128	180	18	8	M16
125	158	132	220	135	180	18	8	M16
140	188	155	250	158	210	18	8	M16
160	212	175	285	178	240	22	8	M20
180	212	180	285	188	240	22	8	M20
200	268	232	340	235	295	22	8	M20
225	268	235	340	238	295	22	8	M20
250	320	285	395	288	350	22	12	M20
280	320	291	395	294	350	22	12	M20
315	370	335	445	338	400	22	12	M20
355	430	373	505	376	460	22	16	M20
400	482	427	565	430	515	26	16	M24
450	585	514	615	470	565	26	20	M24
450	585	514	670	517	620	26	20	M24
500	585	530	670	533	620	26	20	M24
560	685	615	780	618	725	30	20	M27
630	685	642	780	645	725	30	24	M27
710	800	737	895	740	840	30	24	M27
800	905	840	1015	843	950	33	24	M30
900	1005	944	1115	947	1050	33	28	M30
1000	1110	1047	1230	1050	1160	36	28	M33
1200	1330	1245	1455	1260	1380	39	32	M36

A value for the thickness of the flange of the stub-end (dimension "h", see fig. 6) is not given in ISO 9624. Therefore, different manufacturers of stub-ends may have different measurements, which will thus influence the length of the bolts.

During tightening of the bolts, forces will be transferred via the back-up flanges to the stub-ends, which in turn will compress the gasket.

Specifically for 630 mm pipes but also for PE pipes > 800 mm, the specified dimensions for the stub-ends are probably too small to ensure a good function of the joint. For this reason, some manufacturers have developed their own stub-end designs for certain pipe dimensions. However, correctly installed steel-core profiled rubber gaskets will normally compensate for any performance deficiency.

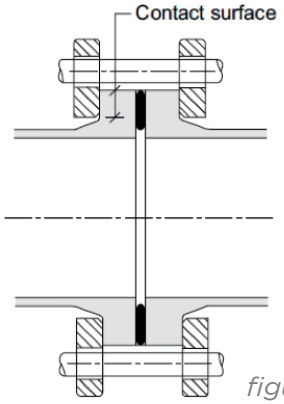

figure 7: Contact area

For larger diameter flanged joints, the contact area between the stub-end and the back-up flange is not proportional to the diameter of the pipe in ISO 9624, it is therefore important to choose a gasket which is able to seal at a low compression level. The bolt torque needs to be adjusted to give a suitable gasket compression. The use of steel core rubber gaskets with an integrated O-ring is recommended.

For further information contact the pipe manufacturer.

3. Flanged joint assembly

At assembly of flanged joints, the flanges and gasket should be centered, supporting one or both halves of the joint if necessary to ensure stub end face concentricity, and angular deviation in the joint should be corrected. The end surfaces of the stub-ends shall be close to each other before the bolts are tightened in order to avoid elongation of the pipe during joint assembly. Bolts shall be tightened crosswise in at least six stages. Starting with finger tightness, and consequently by using a torque wrench with the same increment of torque up to the final torque required to achieve the correct tightening pressure in the joint. The torque of the bolts in flange connections is of particular importance. Therefore the use of lubricated bolts to minimize external influences is recommended. It is recommended that for diameters above 180 mm, two operators work simultaneously on diametrically opposite bolts if possible. Additional tightening to the recommended torque should be carried out several hours later and also on the next day.

Different types of gaskets may require different sealing pressures to ensure joint tightness. The necessary sealing pressure for the gasket is normally proportional to the internal pressure in the pipe. As a rough rule of thumb, the sealing pressure should be at least twice the maximum internal pressure in the pipe. Re-tightening during the installation or during the service regularly will normally decrease the risk for leakage. However, the selection of gasket type is important and will influence the performance of the joint. Drop-in steel core gaskets with intergrated O-ring (Figs. 4 & 5) have been shown to have better performance than other types of gaskets.

It is the design engineer or the joint supplier's responsibility to select suitable components for the flanged joint and should supply instructions for the assembly operation.